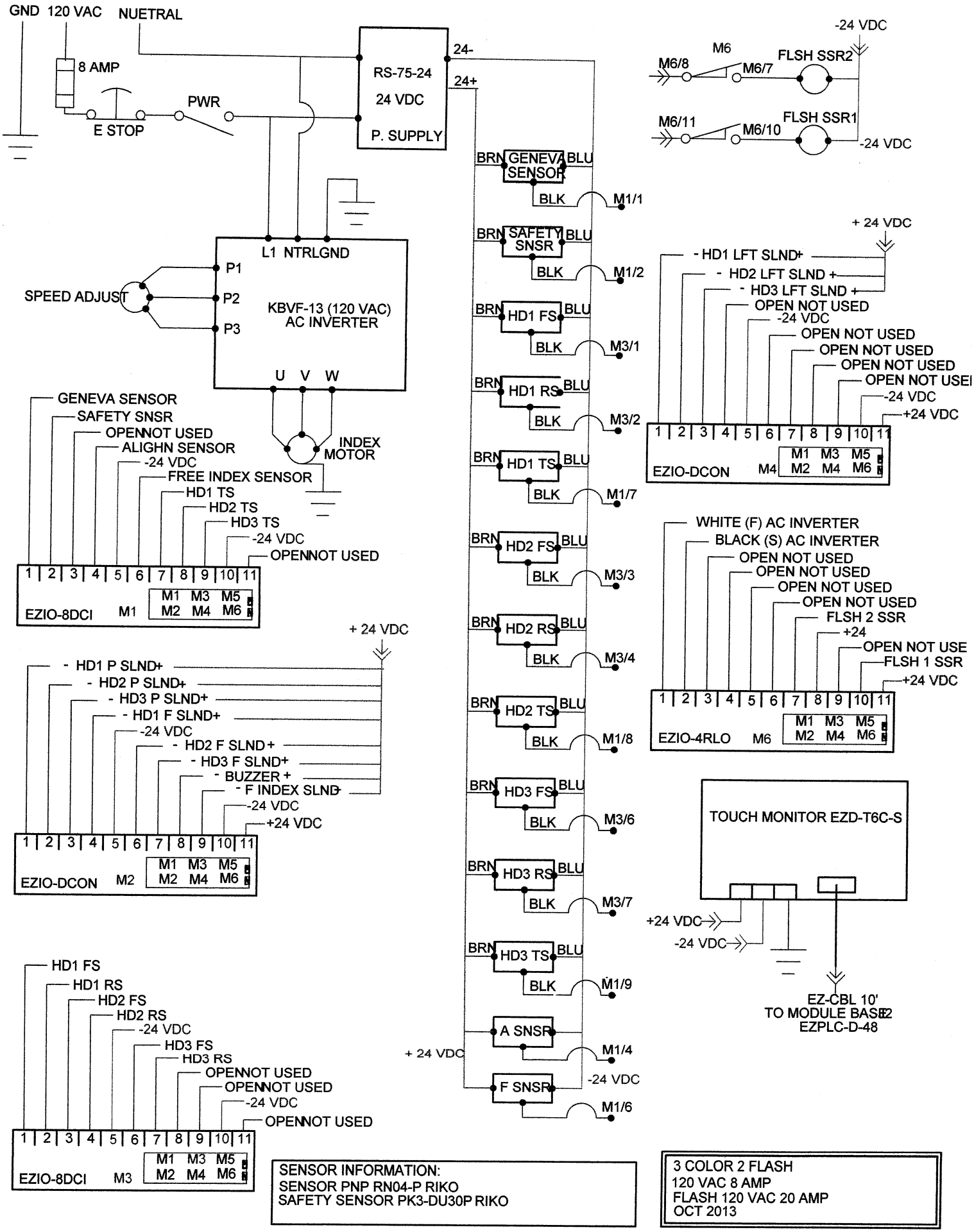
GND
120 VAC
NUETRAL
8 AMP
E STOP
PWR
RS-75-24
24 VDC
P. SUPPLY
24-
24+
-24 VDC
M6
M6/8
M6/7
FLSH SSR2
M6/11
M6/10
FLSH SSR1
-24 VDC
BRN GENEVA SENSOR BLU
BLK M1/1
BRN SAFETY SNSR BLU
BLK M1/2
BRN HD1 FS BLU
BLK M3/1
BRN HD1 RS BLU
BLK M3/2
BRN HD1 TS BLU
BLK M1/7
BRN HD2 FS BLU
BLK M3/3
BRN HD2 RS BLU
BLK M3/4
BRN HD2 TS BLU
BLK M1/8
BRN HD3 FS BLU
BLK M3/6
BRN HD3 RS BLU
BLK M3/7
BRN HD3 TS BLU
BLK M1/9
A SNSR
M1/4
+ 24 VDC
F SNSR
-24 VDC
M1/6
L1 NTRLGND
P1
P2
P3
SPEED ADJUST
KBVF-13 (120 VAC)
AC INVERTER
U V W
INDEX MOTOR
GENEVA SENSOR
SAFETY SNSR
OPENNOT USED
ALIGHN SENSOR
-24 VDC
FREE INDEX SENSOR
HD1 TS
HD2 TS
HD3 TS
-24 VDC
OPENNOT USED
1 2 3 4 5 6 7 8 9 10 11
EZIO-8DCI M1
M1 M3 M5
M2 M4 M6
+ 24 VDC
- HD1 P SLND+
- HD2 P SLND+
- HD3 P SLND+
- HD1 F SLND+
-24 VDC
- HD2 F SLND+
- HD3 F SLND+
- BUZZER +
- F INDEX SLND-
-24 VDC
+24 VDC
1 2 3 4 5 6 7 8 9 10 11
EZIO-DCON M2
M1 M3 M5
M2 M4 M6
HD1 FS
HD1 RS
HD2 FS
HD2 RS
-24 VDC
HD3 FS
HD3 RS
OPENNOT USED
OPENNOT USED
-24 VDC
OPENNOT USED
1 2 3 4 5 6 7 8 9 10 11
EZIO-8DCI M3
M1 M3 M5
M2 M4 M6
+ 24 VDC
- HD1 LFT SLND+
- HD2 LFT SLND +
- HD3 LFT SLND +
OPEN NOT USED
-24 VDC
OPEN NOT USED
OPEN NOT USED
OPEN NOT USED
OPEN NOT USEI
-24 VDC
+24 VDC
1 2 3 4 5 6 7 8 9 10 11
EZIO-DCON M4
M1 M3 M5
M2 M4 M6
WHITE (F) AC INVERTER
BLACK (S) AC INVERTER
OPEN NOT USED
OPEN NOT USED
OPEN NOT USED
OPEN NOT USED
FLSH 2 SSR
+24
OPEN NOT USE
FLSH 1 SSR
+24 VDC
1 2 3 4 5 6 7 8 9 10 11
EZIO-4RLO M6
M1 M3 M5
M2 M4 M6
TOUCH MONITOR EZD-T6C-S
+24 VDC
-24 VDC
EZ-CBL 10'
TO MODULE BASE
EZPLC-D-48
SENSOR INFORMATION:
SENSOR PNP RN04-P RIKO
SAFETY SENSOR PK3-DU30P RIKO
3 COLOR 2 FLASH
120 VAC 8 AMP
FLASH 120 VAC 20 AMP
OCT 2013